Discrete Event Dynamic Simulation for Modeling a Real job shop system
Case study of a plastic recycle company.

Golshan Madraki, Dusan Sormaz

Department of Industrial and System Engineering
OHio University

ASEE2015

1. Introduction

In the current study a novel approach for simulating a job shop system is introduced. The system is described as a discrete-event simulation, where the flow of the system is implied according to the queuing network.

Computer simulation provides this opportunity to track the behavior of the system under variety of possibilities which assist decision makers to estimate and forecast the consequence of each alternatives. Current simulated model is unique in term of flexibility and comprehensiveness since the inter-arrival time of jobs, processing time of machines, time between failures, and repair time are considered according to the general distribution. However, previous models consider these parameters deterministic or exponentially distributed. The application of current simulation framework has been illustrated by a real case of plastic recycling manufacturer simulated by software tool called **SimEvents, Simulink , MATLAB.**

Target : facilitate decision makers to predict and estimate the **maximum production rate** by simulation. All considerable scenarios can be made by varying three crucial variables in decision making in proposed model:

- **Buffers capacity**
- **Number of machines in each shop(could be non identical)**
- **Number of Lift-truck in the system which convey buffers through each job sequence of operation.**

2. Real Case description and properties:

A plastic recycling manufacturer producing 3 types of jobs or production: granule (J_{gran}), LDPE film (J_{film}) and Garbage Bag (J_{vrec}:)

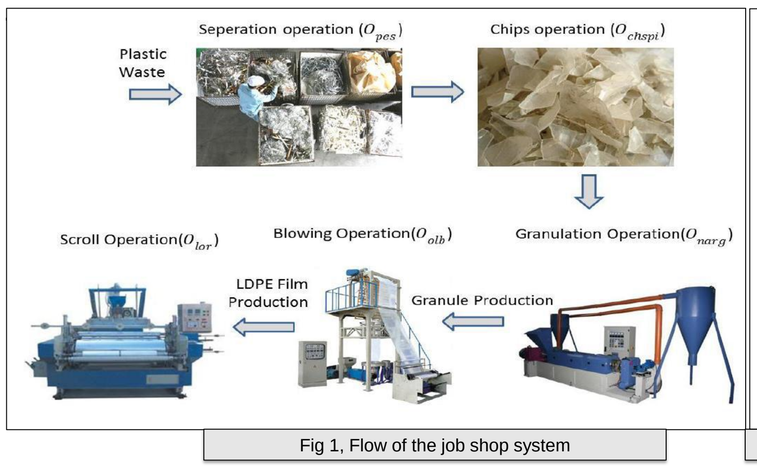

Fig 1, Flow of the job shop system

$$J_{gam} \rightarrow \{O_{sep}, O_{chips}, O_{gran}\}$$

$$J_{flm} \rightarrow \{O_{sep}, O_{chips}, O_{gran}, O_{blo}\}$$

$$J_{vrec} \rightarrow \{O_{sep}, O_{chips}, O_{gran}, O_{blo}, O_{rol}\}$$

Fig 2, sequenced of operation for each job

3. Design

Each system has three critical section **: input section, processing section , output section.**

3.1 Input section

Entity Generators is needed to produce input of the system, Time base entity generator is the best option. Also a block of FIFO Queue is necessary after generating input to save the order of inputs to enable to use Queueing theory and network advantages.

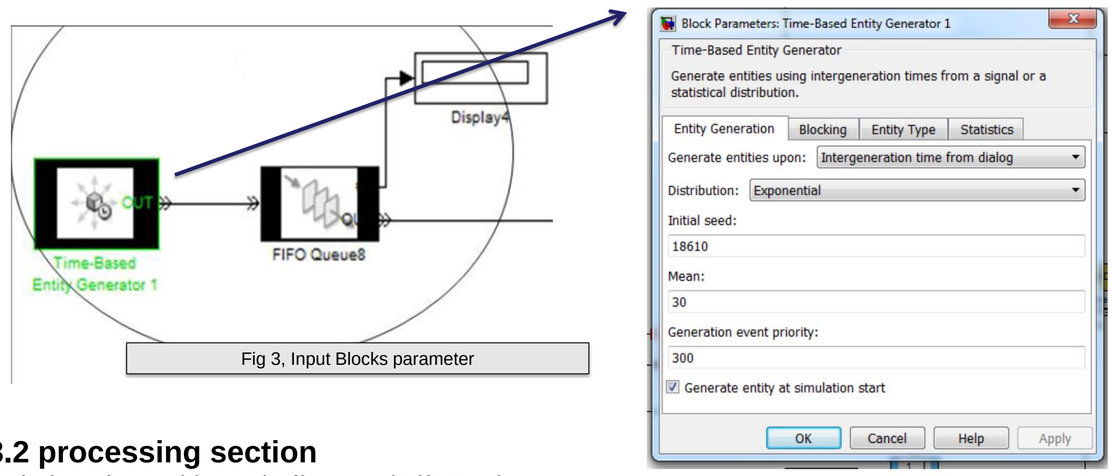

Fig 3, Input Blocks parameter

3.2 processing section

Includes of : machines , buffers and Lift-Truck

3.2.1 machines : Each shop might contain several machines which can be identical or not. Figure 4 is the simulation of each machine as a single server. Upper parts simulate the machine per se, meanwhile, lower parts enable the server module to be failed and repaired according to general distribution.

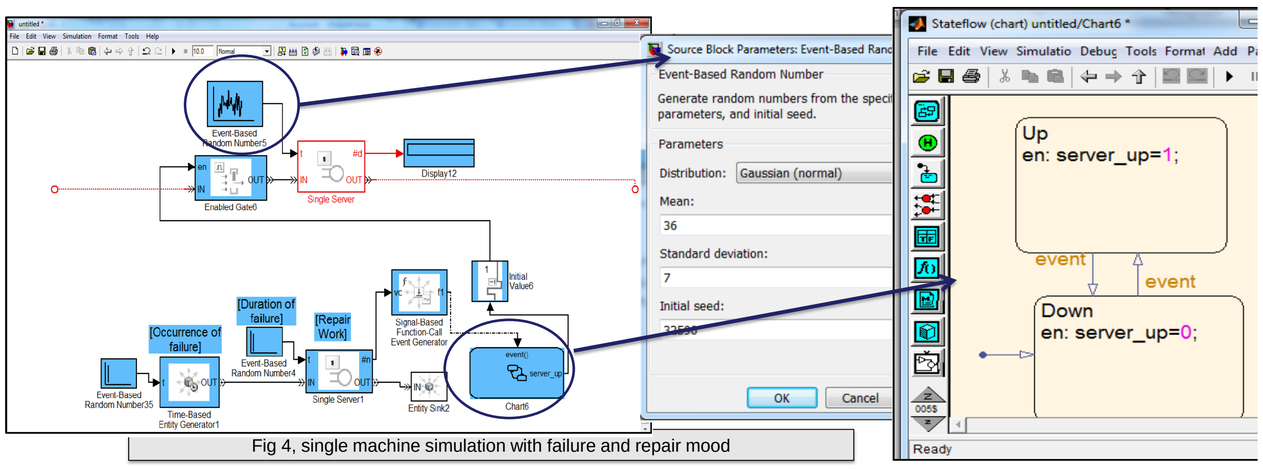

Fig 4, single machine simulation with failure and repair mood

Output divider and *input combiner* blocks are utilized to connect several machines to simulate a full shop. For instance, Figure5, illustrates a shop having three machines.

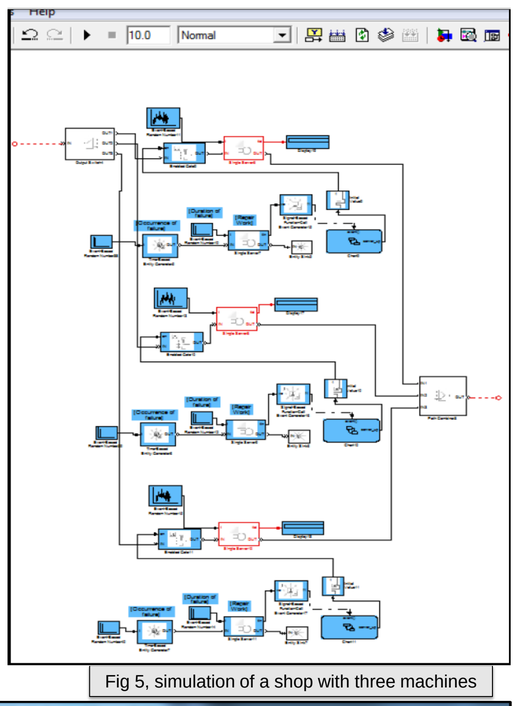

Fig 5, simulation of a shop with three machines

3.2.2 Buffers

The tricky point about buffers is to be designed in the way that jobs inside each buffer has a properties of destination and types of jobs individually. Figure 6, resembles such a buffer. Note that capacity of buffer can be determined and changed in *FIFO Queue* Block. *Also in* Figure 6, *Stateflow (chart)* block guarantees that the buffer get full before being transferred by lift-truck.

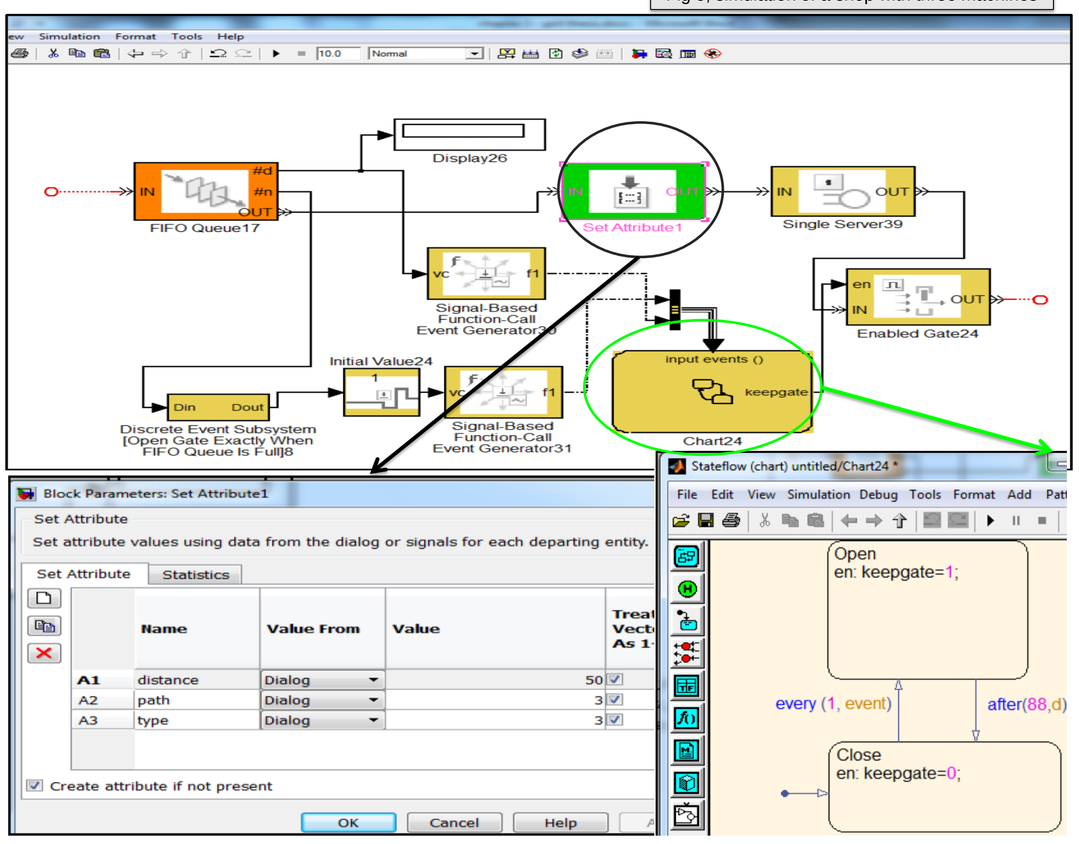

Fig 6, Simulation of a Buffer considering type of jobs and destination , in addition to filling the buffers before transfering

3.2.3 Lift-Truck

It is assumed that lift-trucks are such a *N-servers* module which their processing time are the time takes to deliver buffers from origin to destination. Destination and type of the jobs are recalled from the *attributes* attached to each buffers.

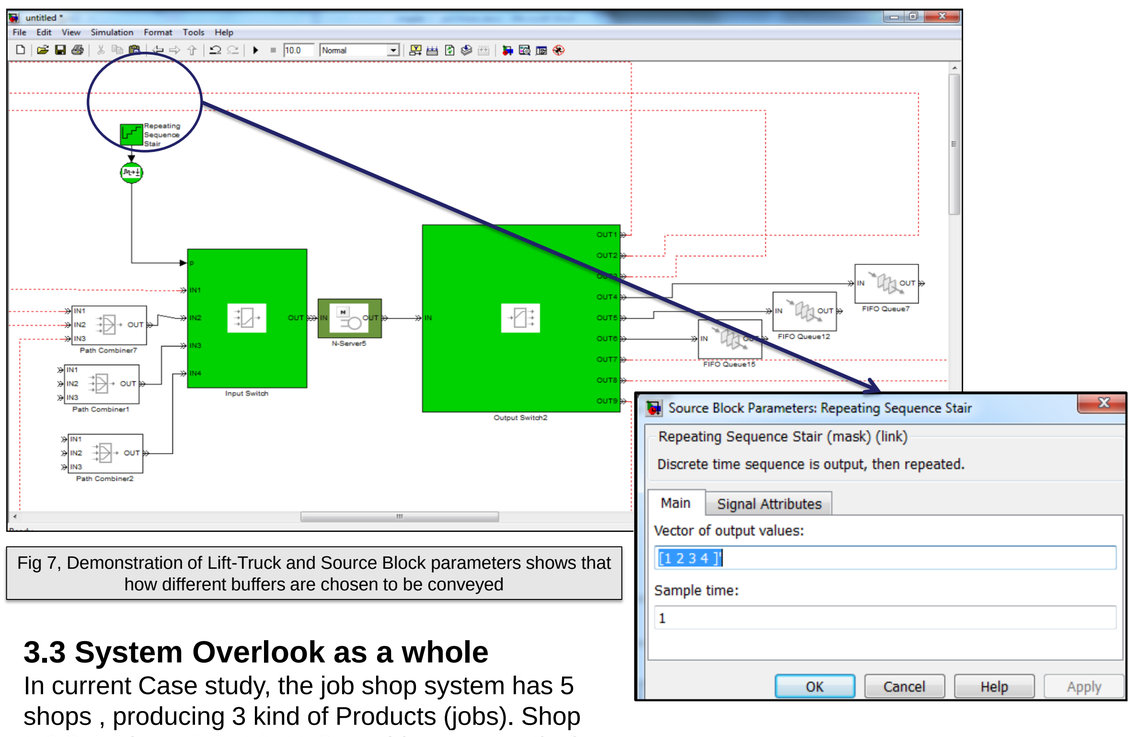

Fig 7, Demonstration of Lift-Truck and Source Block parameters shows that how different buffers are chosen to be conveyed

3.3 System Overlook as a whole

In current Case study, the job shop system has 5 shops , producing 3 kind of Products (jobs). Shop 1,2,3,4,5 have 5,5, 10, 11,3 machines respectively as it is demonstrated in figure 8.

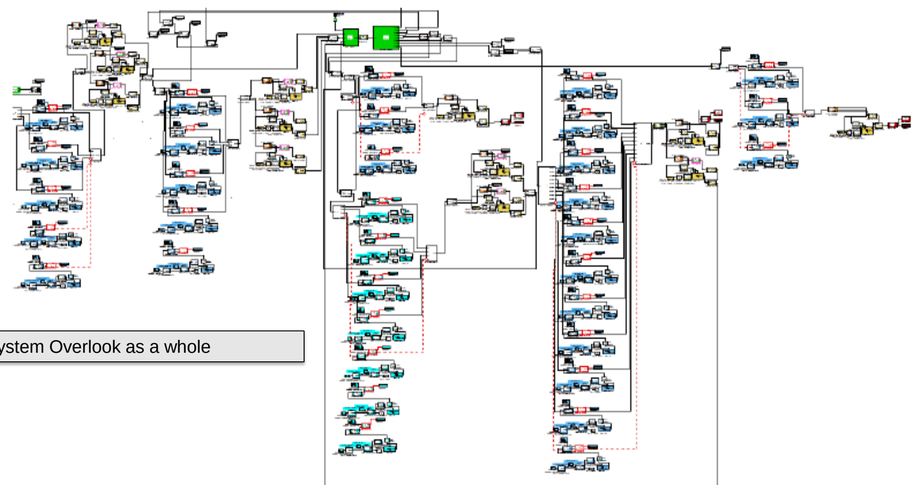

Fig 8, System Overlook as a whole

4. Conclusion

In this study, a framework for simulating a flexible job shop system was proposed. Simulation model was widely explained by detail of subblocks in a step by step procedure. High flexibility and comprehensiveness are two main advantages of this framework in comparison to previous studies. Processing time , time between failure, repairing time, inter-arrival time of the entities all are considered to be according to the general distribution.

5. References

G. Madraki, M. Amiri, M. Mohtashami, *An Efficient Simulated Based Methodology to Maximize Production Rate in Unreliable Job Shop System.* Proceedings of the 2015 Industrial and Systems Engineering Research Conference, 2015.